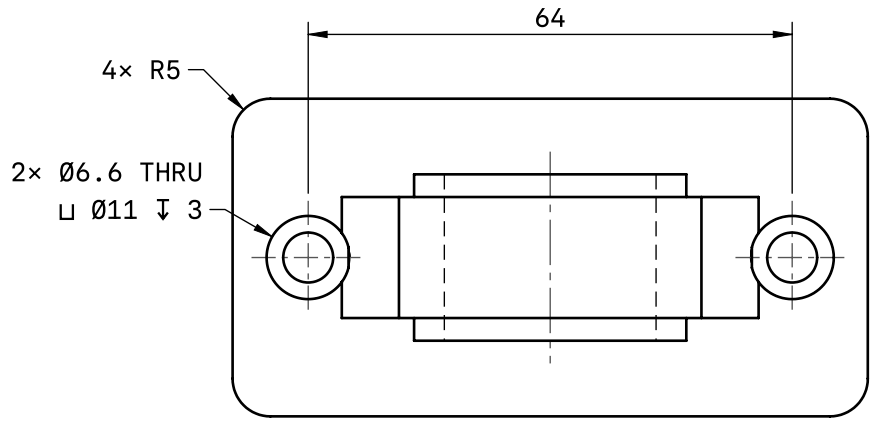

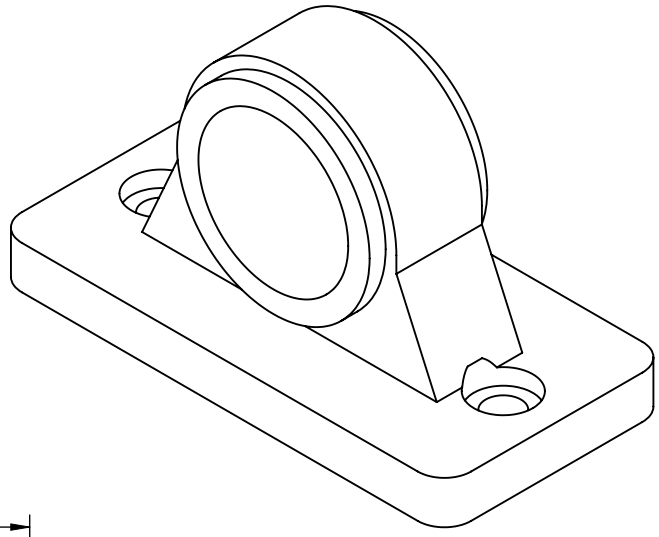

ISOMETRIC 1:1

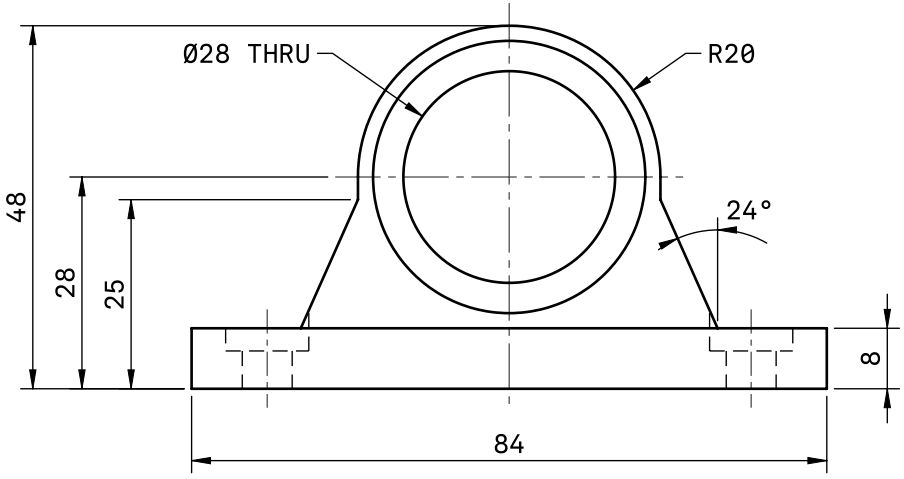

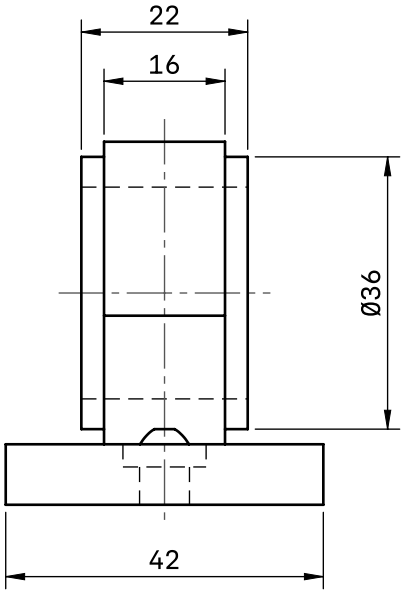

NOTES

1. ALL DIMENSIONS IN MILLIMETRES.
2. REFERENCE DRAWING. GEOMETRY FROM BEARING-MOUNT.STEP.

	TITLE	DRAWING NO.	SCALE	UNITS	PROJECTION	SHEET
Adam	BEARING MOUNT	BM-01	1:1	MM		1 / 1